Soil Temperature Moisture EC PH NPK Salinity 8 in 1 Product User Manual

RD-SMTESNPKPH-O-01

1 Overview

The soil temperature part is composed of ST-1-PT1000 precision platinum resistor and high precision sensor imported by Heraeus Company of Germany. The sensor part is composed of power supply module, temperature sensing module, transmission module, temperature compensation module and data processing module, etc., which thoroughly solves the measurement error caused by platinum resistance due to its own characteristics. There are zero drift circuit and temperature compensation circuit in the sensor, which has high adaptability to the use environment.

The part of soil moisture is based on the principle of frequency domain reflectance and high-frequency electronic technology, which is a high-precision and high-sensitivity sensor for measuring soil moisture. By measuring the dielectric constant of soil, the real moisture content of various soils can be directly and stably reflected, and the volume percentage of soil moisture can be measured. It is the most popular soil moisture measurement method in the world at present.

The part of soil conductivity is converted into analog or digital signal of soil conductivity by stainless steel probe through sensor. In the development process, the advanced technology of similar instruments abroad is absorbed, and combined with the actual situation and application requirements of our country, the conductivity value is converted into corresponding analog or digital signal. After the conductivity sensor is embedded in soil, the conductivity of soluble salt ions in soil solution can be directly measured.

In the part of soil nitrogen, phosphorus and potassium, the fertile degree of soil is judged by detecting the content of nitrogen, phosphorus and potassium in the soil, which is convenient for customers to evaluate the soil situation systematically.

2 Characteristic

1. The size of the sensor is small and compact.
2. High measurement accuracy, fast response speed and good interchangeability.
3. It has good sealing performance, can be directly buried in soil and is not corroded.
4. The influence of soil quality is small, and the application area is wide.
5. Accurate measurement, reliable performance, ensuring normal work and high data transmission efficiency.

3 Scope of application

It is suitable for water-saving agricultural irrigation, meteorological monitoring, environmental monitoring, greenhouse, flowers and vegetables, grassland and pasture, soil rapid measurement, plant culture, scientific experiments and other fields that need to measure soil temperature, humidity, salinity, conductivity and soil nitrogen, phosphorus and potassium.

4 Product information

4.1 Technical Parameters

- Measurement parameters: Soil temperature, soil volume moisture, soil electrical conductivity (EC value), Salinity, soil nitrogen/phosphorus/potassium, soil PH
- Unit of measurement: ℃; % (m3/m3); μ S/cm; Mg/kg (mg/L)
- Temperature range:-30 ~ 70 ℃ (0 ~ 50 ℃ or any other range can be customized)
- Water component range: 0 ~ 100% (30%, 50% and other measuring ranges can be selected or customized for any measuring range)
- Conductivity ranges: 0 ~ 2000 μ S/cm, 0 ~ 20000 μ S/cm, default is 0-20000us/cm
- Salinity range: 0 ~ 2000 μ S/cm, 0 ~ 20000 μ S/cm, default is 0-20000us/cm
- Nitrogen/phosphorus/potassium range: 0 ~ 1999mg/kg (mg/L)
- Soil PH:3-9
- Measurement accuracy: 0.2 ℃; 2% (m3/m3) in the range of 0 ~ 50% (m3/m3); ± 2%; ± 3% (mg/kg), ±0.5ph
- Resolution: 0.1 ℃; 0.1%; 1 μ S/cm; 1mg/kg (mg/L),0.1ph
- Output signal: RS485 (standard Modbus-RTU protocol, device default address: 01)
- Supply voltage: 7 ~ 24V DC
- Working range:-30 ℃ ~ 70 ℃
- Stabilization time: 3 seconds after power-on
- Response time: < 1 second

4.2 Physical Parameters

- Probe length: 55mm, φ 3mm
- Probe material: 316L stainless steel
- Sealing material: ABS engineering plastics, epoxy resin, waterproof grade IP68
- Cable specification: 2 meters as standard (other cable lengths can be customized, up to 1200 meters)

5 Shape specification

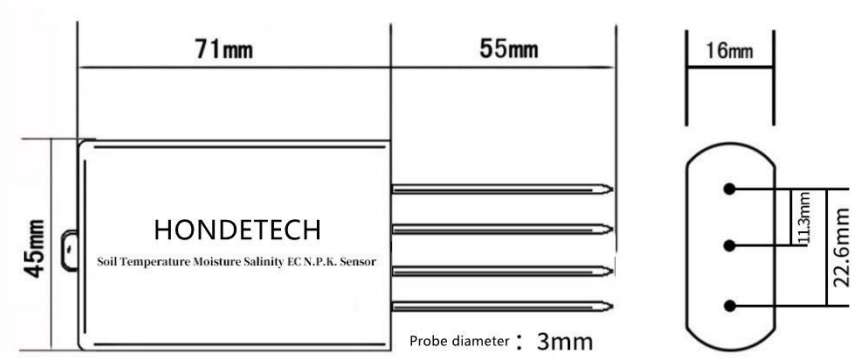

6 Usage

Soil temperature and humidity + salt + EC +salinity+ nitrogen, phosphorus and potassium sensor can be connected with various data collectors, data acquisition cards, remote data acquisition modules and other equipment with differential input. The connection mode is as follows:

Wire Colour	**Definition**
Red	Positive power supply: 7-24VDC
Black	Negative power supply
Yellow	RS485 A
Green	RS485 B

7 Measure method

Since the electrode directly measures the conductivity of the soluble salt ions in the soil, the soil volumetric water content must be higher than about 20% when the soluble ions in the soil can accurately reflect the conductivity of the soil. In the long-term observation, the measured value after irrigation or rainfall is closer to the true level. If you are performing a quick test, you can water the soil to be tested first, and perform the measurement after the water is fully penetrated.

If you are measuring on a hard surface, you should drill a hole first (the hole diameter should be smaller than the probe diameter), then insert it into the soil and compact the soil before measuring; the sensor should be protected from severe vibration and impact, let alone knocked with hard objects. Because the sensor is a black package, the sensor will heat up sharply (up to 50℃) under strong sunlight. In order to prevent excessive temperature from affecting the temperature measurement of the sensor, please pay attention to shading and protection when using it in the field or in the field. .

1. Soil Surface measure method

- Select a representative soil environment to clean up surface debris and vegetation
- Insert the sensor vertically and completely into the soil

- If there is a hard object, the measurement location should be replaced and re-measured
- For accurate data, it is recommended to measure multiple times and take the average
- To measure deep soil moisture, it is recommended to use our company's dedicated soil drill

2. Buried measure method

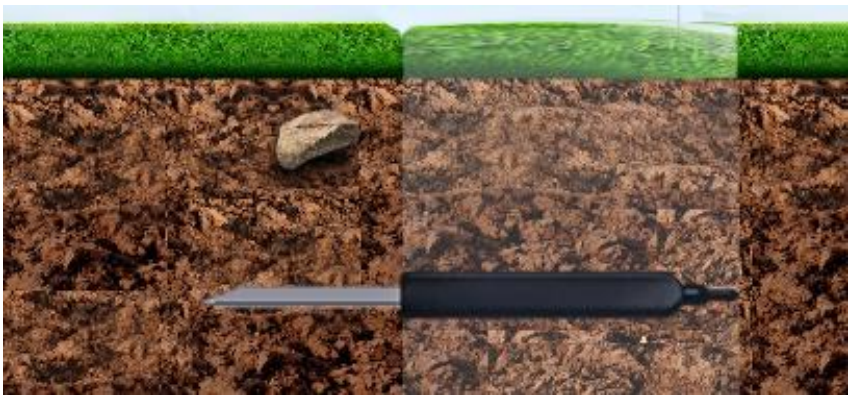

- Make a soil profile in the vertical direction, slightly deeper than the installation depth of the bottommost sensor, between 20cm and 50cm in diameter
- Insert the sensor horizontally into the soil profile
- After the installation is completed, the excavated soil is backfilled in order, layered and compacted, and horizontal installation is guaranteed.
- If you have the conditions, you can put the removed soil in a bag and number it to keep the soil moisture unchanged, and backfill it in reverse order.

3. Three-tier installation

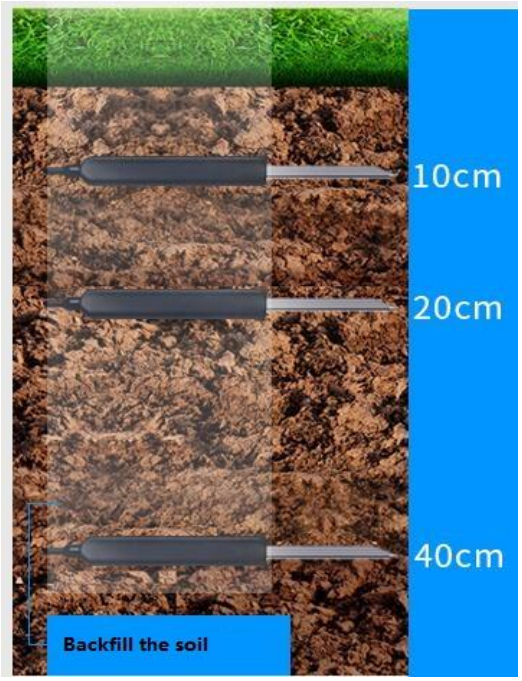

4. Six-tier installation

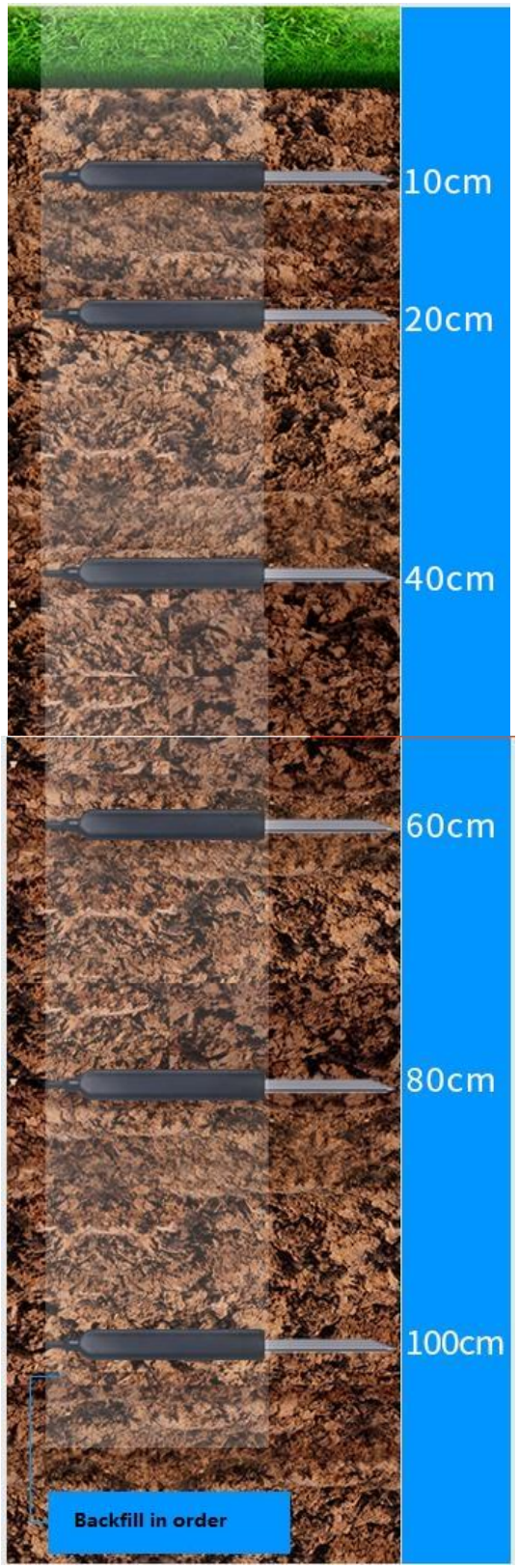

5. Measure Notes

(1). All steel needles must be inserted into the soil during measurement.

(2). Avoid direct sunlight on the sensor, which will cause excessive temperature. Field ambassador use caution against lightning strikes.

(3). Do not bend the steel needle violently, do not pull the sensor lead wire with force, do not beat or violently impact sensor.

(4). The protection grade of the sensor is IP68, which can soak the sensor in water.

(5). Due to the presence of radio frequency electromagnetic radiation in the air, it should not be left in the air for a long time power-on state

8 Data conversion method

1. Standard Modbus-RTU protocol

Baud rate: 2400bit/s, 4800bit/s, 9600 bit/s can be set, the factory default is 9600bit/s

Check digit: none;

Data bit: 8; Stop bit: 1

2. Data frame format definition

Using Modbus-RTU communication protocol, the format is as follows:

Time for initial structure ≥ 4 bytes

Address code = 1 byte

Function code = 1 byte

Data area = N bytes

Error check = 16-bit CRC code

End structure ≥ 4 bytes of time

Address code: the address of the transmitter, which is unique in the communication network (factory default 0x01).

Function code: the instruction function instruction issued by the host, this transmitter only uses the function code 0x03 (read register data).

Data area: The data area is specific communication data, pay attention to the high byte of 16bits data first!

CRC code: two-byte check code.

Host inquiry frame structure

Address code	Function code	Register start address	Register length	Check digit low	Check digit high
1 byte	1 byte	2 bytes	2 bytes	1 byte	1 byte

Slave response frame structure

Address code	Function code	Effective bytes	Data 1 area	Data 2 area	Data N area	Check code
1 byte	1 byte	1 byte	2 bytes	2 bytes	2 bytes	2 bytes

3. Register address

Register address	PLC or configuration address	Content	Operation	Definition description
0000 H	40001 (Decimal)	Soil temperature	Read only	Real-time value of soil temperature value (expand 10 times)
0001 H	40002 (Decimal)	Soil moisture	Read only	Real-time value of soil moisture value (expand 10 times)
0002 H	40003 (Decimal)	Soil EC	Read only	Real-time value of soil EC value
0003 H	40004 (Decimal)	Soil PH	Read only	Real-time value of soil ph value (extend 100 times)
0004 H	40005 (Decimal)	Soil N	Read only	Real-time value of soil N value
0005 H	40006 (Decimal)	Soil P	Read only	Real-time value of soil P value
0006 H	40007 (Decimal)	Soil K	Read only	Real-time value of soil K value
0007 H	40008 (Decimal)	Soil salinity	Read only	Real-time value of soil salinity value
0030 H	40049 (Decimal)	Device address	Read and write	1~254 (factory default 1)
0031H	40050 (Decimal)	Baud rate	Read and write	Baud rate: 2400 Baud rate: 4800 Baud rate: 9600 Baud rate: 19200
0053 H	40084 (Decimal)	Slop calibration	Read and write	Apply the above 8 parameters(expand 1000 times)
0054 H	40085 (Decimal)	Offset calibration	Read and write	Apply the above 8 parameters

Before calibrating each parameter, please select the corresponding calibration channel first, and then calibrate. The specific calibration channels are as follows:

Parameter	Channel	Instruction
Soil temperature	0000	FE 06 00 6F 00 00 AD D8
Soil moisture	0001	FE 06 00 6F 00 01 6C 18
Soil EC	0002	FE 06 00 6F 00 02 2C 19
Soil Salinity	0003	FE 06 00 6F 00 03 ED D9
Soil N	0004	FE 06 00 6F 00 04 AC 1B
Soil P	0005	FE 06 00 6F 00 05 6D DB
Soil K	0006	FE 06 00 6F 00 06 2D DA
Soil PH	0007	FE 06 00 6F 00 07 EC 1A

4. Address Modification

For example, the sensor with address 1 is changed to address 2, and the host → slave

Original address	Function code	Start register high	Start register low	High starting address	Low starting address	Low CRC16	CRC16 High
0X01	0X06	0X00	0X30	0X00	0X02	0X08	0X04

If the sensor receives correctly, the data returns according to the original route.

Remarks: If you forget the original address of the sensor, you can use the broadcast address 0XFE instead. When using 0XFE, the host can only connect with one slave, and the return address is still the original address, which can be used as an address query method.

5. Query Data

Inquire the data of sensor (address 1) (soil temperature, soil moisture, soil conductivity, soil PH ,

soil nitrogen, phosphorus, potassium, soil salinity) master → slave

Address	Function code	Start register address high	Start register address low	High register length	Low register length	Low CRC16	CRC16 High
0X01	0X03	0X00	0X00	0X00	0X08	0X44	0X0C

If the sensor receives correctly, return the following data, slave → host

Address	0X01	
Function code	0X03	
Data length	0X10	
Register 0 data high	0X00	Soil temperature: 24.3℃
Register 0 data low	0XF3	
Register 1 data high	0X03	Soil humidity: 100%
Register 1 data low	0XE8	
Register 2 Data High	0X01	Soil EC: 466μ S/cm
Register 2 data low	0XD2	
Register 3 Data High	0X02	Soil PH: 6.92ph
Register 3 Low Data	0XB4	
Register 4 Data High	0X00	Soil nitrogen: 29mg/kg
Register 4 Low Data	0X1D	
Register 5 Data High	0X00	Soil phosphorus: 39mg/kg
Register 5 Low Data	0X27	
Register 6 Data High	0X00	Soil potassium: 98mg/kg
Register 6 Low Data	0X62	
Register 7 Data High	0X01	Soil Salinity:473 mg/kg
Register 7 Low Data	0XD9	
Low CRC16	0X55	CRC Code
High CRC16	0X91	

6. Chang the baud rate

The default is 9600, if change into others, please send the following:

- Inquiry frame

Change Baud rate	Address code	Function code	Register start address	Change value	Low check bit	Check code high
2400	0X01	0X06	0X00 0X31	0X24 0X00	0XC3	0X05
4800	0X01	0X06	0X00 0X31	0X48 0X00	0XEE	0X05
9600	0X01	0X06	0X00 0X31	0X96 0X00	0XB7	0XA5
19200	0X01	0X06	0X00 0X31	0X19 0X20	0XD2	0X45

If success, it will feedback the same with the sending instruction.

7. Make the calibration and the numerical offset of the soil PH

Method 1. Make the calibration of the soil PH solution of the 4.01, 6.86, 9.18 for the sensor address 01

1.1 Select parameter configuration channel

Send: FE 06 00 6F 00 07 EC 1A

Put the steel needle into 4.00 standard solution FE 06 00 55 00 00 8D D5

Send: FE 06 00 6D AA AA F2 C7

Put the steel needle into 6.86 standard solution FE 06 00 56 00 00 7D D5

Send: FE 06 00 6E AA AA 02 C7

Put the steel needle into 9.18 standard solution FE 06 00 57 00 00 2C 15

1.2 Restore parameters

Save parameter settings after calibration is completed

Send: FE 06 00 6D 01 C2 8C 19

Send: FE 06 00 6E 03 20 FD 30

Method 2. Make the numerical offset of the soil PH

2.1 Select the parameter configuration channel

FE 06 00 6F 00 07 EC 1A

For example, add 0.03 PH for the sensor address 01, please send the following instruction

FE 06 00 54 00 03 9C 14

If success, it will feedback.

Method 3. Make the calibration by the slop rate

3.1 Select the parameter configuration channel

FE 06 00 6F 00 07 EC 1A

For example, change the PH in 0.98 times for the sensor address 01, please send the following instruction

FE 06 00 53 00 62 EC 3D

If success, it will feedback.

8. Make the calibration of the soil moisture

Method 1: Calibrate the soil moisture of sensor address 01 in air and water

1.1 Select parameter configuration channel

FE 06 00 6F 00 01 6C 18

1.2 The sensor needle is calibrated in air (the data after calibration is 0%)

FE 06 00 55 00 00 8D D5

1.3 The sensor steel needle is calibrated when submerged in water (the data after calibration is 100%)

FE 06 00 57 00 00 2C 15

Method 2: Make the soil moisture sensor calibration by the offset

2.1 Select parameter configuration channel

FE 06 00 6F 00 01 6C 18

2.2 If you want to add 5.0% (50 DEC=0032 HEX) moisture for the sensor, please send the following instruction

FE 06 00 54 00 32 5D C0

Method 3. Make the soil moisture sensor calibration by slope

3.1 Select parameter configuration channel

FE 06 00 6F 00 01 6C 18

3.2 If you want to change 1.1 times (1100 DEC=044C HEX) of the moisture for the sensor, please send the following instruction

FE 06 00 53 04 4C 6E E1

9. Make the calibration of the soil temperature

Method 1: Calibrate Soil Temperature by offset for Sensor Address 01

1.1 If there is an error between the temperature measurement value and the actual value, the adjustment method is as follows

1.1.1 Select parameter configuration channel

FE 06 00 6F 00 00 AD D8

For example, the sensor address 01 increases by 1°C, please send the following command

FE 06 00 54 00 0A 5C 12

If success, it will feedback.

For example, sensor address 01 decreases by 1°C, please send the following command

FE 06 00 54 FF F6 1D A3

If success, it will feedback.

Method 2: Make the calibration by the slop rate for sensor address 01

2.1 Select parameters configuration channel

FE 06 00 6F 00 00 AD D8

2.2 For example, the sensor address 01 increases by 1.1 times, please send the following command

FE 06 00 53 04 4C 6E E1

If success, it will feedback:

10. Make the calibration of the soil EC

Method 1: Calibrate the soil EC by offset for sensor address 01

1.1 If there is an error between the measured EC and the actual value, the adjustment method is as follows

1.1.1 Select parameter configuration channel

FE 06 00 6F 00 02 2C 19

For example, the sensor address 01 increases by 10, please send the following command

FE 06 00 54 00 0A 5C 12

If success, it will feedback.

For example, the sensor address 01 is reduced by 10, please send the following command

FE 06 00 54 FF F6 1D A3

If success, it will feedback.

Method 2: Make the calibration by the slop rate for sensor address 01

2.1 Select parameters configuration channel

FE 06 00 6F 00 02 2C 19

2.2 For example, the sensor address 01 increases by 1.1 times, please send the following command

FE 06 00 53 04 4C 6E E1

If success, it will feedback:

All of the soil parameters can be calibration by the offset and the slope rate, for the other parameters, it is similar as above.

8 Matters needing attention in use

Please read this manual completely before using it.

Do not try to insert the probe into stones or hard clods, so as not to damage the probe.

When the sensor is removed from the soil, the cable cannot be pulled directly.

The sensor probe should be fully inserted into the soil/substrate to reduce the operation error and improve the measurement accuracy.

9 Product warranty

The warranty period of this product is one year. From the date of delivery, within 6 months, due to sensor quality problems (non-man-made damage) caused by the failure, the company is responsible for free repair or replacement, beyond the warranty period only charge cost.